Name: _____

Matriculation number: _____

Scoring:

Implicit 6 Pt.	3D Scan 6 Pt.	ScanProc 6 Pt.	Rotation 6 Pt.	Skinning 6 Pt.	Rigging 6 Pt.	Subdiv. 6 Pt.	Sum 42 Pt.

Written Exam Computer Graphics 2, SS 2021

Info

- You can reach a maximum of 42 points. For a passing grade, you need 20 points. The duration of the exam is 60 minutes.
- Deactivate all electronic devices and stow them away in your bag.
- The only utilities you may use in addition to blue or black pens are colored pens for the sketches (no red!), erasers, rulers, and English dictionaries.
- You may not use your own paper. Instead, you can request additional sheets from the supervisory staff at any time.
- The space allotted for each task in the exam sheets is always sufficient to contain a correct and complete solution. However, you may use the back page of this title sheet, or any number of additional sheets (see above) for doing auxiliary calculations and corrections.
- Some tasks require you to complete provided sketches. If you made an irrevocable mistake filling out a sketch, you can request another copy from the supervisory staff.
- If you make use of any kind of additional sheets of paper, you must write down your name, your matriculation number, and, in case of a blank sheet, the task number(s).

Checklist

- ☐ Did you write your name und matriculation number on this cover sheet?
- ☐ Did you write your name und matriculation number on all other sheets?
- ☐ Have you looked at *every* task to see if you can solve them?
- ☐ Did you strike out every wrong solution you corrected?

I Implicit Surfaces (6 Pt)

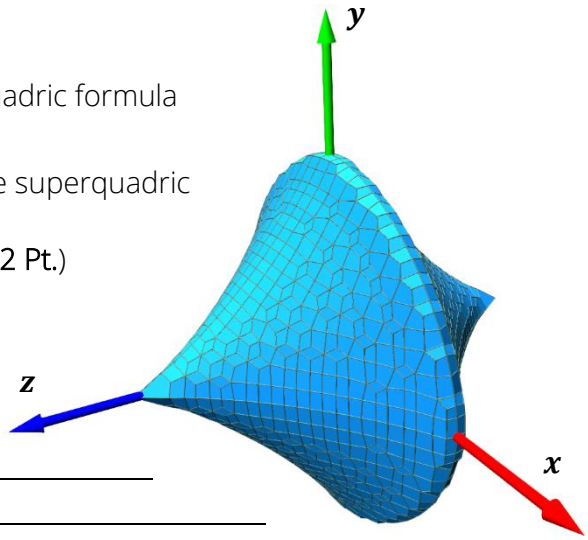

Question I.1

Estimate the exponents p_1 and p_2 in the superquadric formula

$$f_{p_1,p_2}(x,y,z)=\left[\left(|x|^{p_1}+|y|^{p_1}\right)^{\frac{p_2}{p_1}}+|z|^{p_2}\right]^{\frac{1}{p_2}}-1$$ for the superquadric depicted in the image and explain your choices. (2 Pt.)

Which of the two contouring techniques from the lecture was used to create the mesh in the picture? Explain your choice! (1 Pt.)

Question I.2

Compute the gradient of spatial blend function mapping $m(f_1,f_2)=\left(1-\frac{x}{w}\right)f_1+\frac{x}{w}f_2$ given the general formula $m_{\underline{p}}^{\vec{F}}=m_{\underline{p}}\circ\vec{F}+\left(m_{\vec{v}}\circ\vec{F}\right)\cdot\vec{F}_{\underline{p}}$ (3 Pt.)

I 3D Scanning (6 Pt)

Question II.1

Explain briefly how one can use De-Bruijn sequences in a one-shot 3D-scanner for decoding the projector column in a camera pixel! (2 Pt.)

Question II.2

Explain the camera calibration technique according to Zhang using the below figure. (4 Pt.):

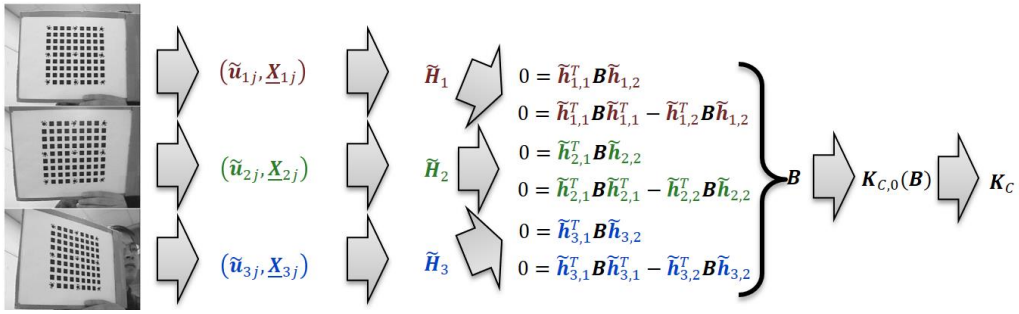

III Scan Processing (6 Pt)

Question III.1

Explain how the influence function $\psi(r) = \partial\rho(r)/\partial r$ is used in the re-weighted least squares approach to optimize with respect to a robust norm $\rho(r)$. (3 Pt.)

Question III.2

Explain ICP point cloud registration and describe a variant that allows for real-time registration. (3 Pt.)

IV Rotations & Articulated Objects (6 Pt)

Question III.1

How many degrees of freedom has a rotation in 3D? Name a representation for a rotation with the minimal number of parameters. (2 Pt.)

Question III.2

Fill in the missing entries in the quaternion multiplication table. (2 Pt.)

$*$	1	i	j	k
1				
i			k	
j				
k		j		

Question III.3

Specify the model transformation from joint $i-1$ to joint i, which is equivalent to the system transform from joint i to joint $i-1$, as a product of translation and rotation matrices that depend on the Denavit-Hartenberg parameters. (2 Pt.)

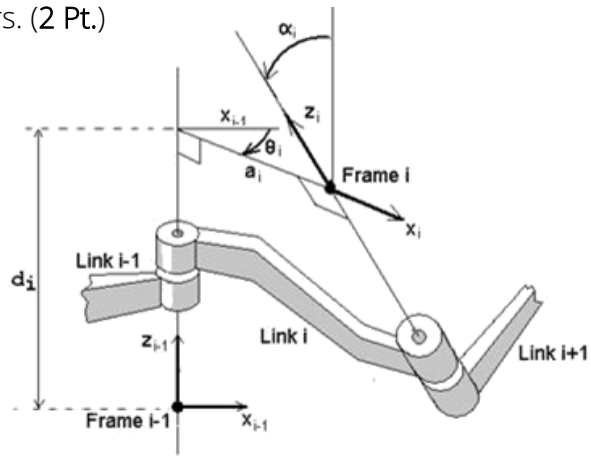

V Skinning (6 Pt)

Question V.1

Explain two artefacts of linear blend skinning. (1 Pt.)

Question V.2

In following table, assign properties to the rigid transformation blending approaches. (3 Pt.)

	Linear blending	Log matrix blending	Spherical blending
Invariance to choice of coord. system			
Blend is a rigid transformation			
Shortest-path interpolation			
Uniform-speed interpolation			

Question V.3

Explain the Plücker coordinate representation of an oriented line. (2 Pt.)

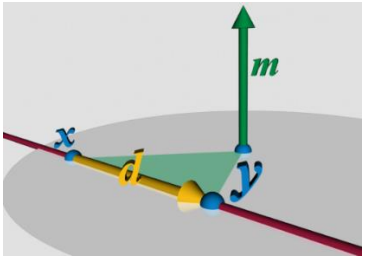

VI Skeleton Extraction and Rigging (6 Pt)

Question VI.1

Explain the properties *thin*, *reconstruction* and *robustness* for curve skeletons. (3 Pt.)

Question VI.2

Explain how the Pinocchio approach is optimized by hand-labeled riggings. (3 Pt.)

VII Subdivision (6 Pt)

Question VII.1

Given the unnormalized mask $\{1 \quad 0 \quad -11 \quad 0 \quad 74 \quad 128 \quad 74 \quad 0 \quad -11 \quad 0 \quad 1\}$ of a subdivision curve with arity 2, extract the stencils and compute the normalization factor (2 Pt.). Is this scheme interpolating or approximating? Explain why. (1 Pt.)

Question VII.2

Explain face split and vertex split subdivision schemes for surfaces with a sketch. (2 Pt.)

Question VII.3

How can subdivision surfaces with sharp edges be supported? (1 Pt.)